LATOSCANA

INSTALLATION SUBMITTAL AND DIMENSION

Serie Elba

78..214
Widespread lavatory faucet.

78CR214 Polished Chrome
78PW214 Brushed Nickel
78OK214 Matt Gold PVD
78BL214 Matt Black PVD

STANDARDS

- Compliant with ASME A112.18.1 - CSA B125.1
- Compliant with ANSI/NSF 61
- Compliant with NSF 372 (Low lead)
- Certified by IAPMO R&T Lab
- Meets EPA Water Sense Certification: 1.2gpm, 4.5L/min
- ADA Compliant

FEATURES

Solid Brass Construction
1/4 turn Ceramic Disc Valve
Metal Pop-up assembly
Step-By-Step Installation Instructions
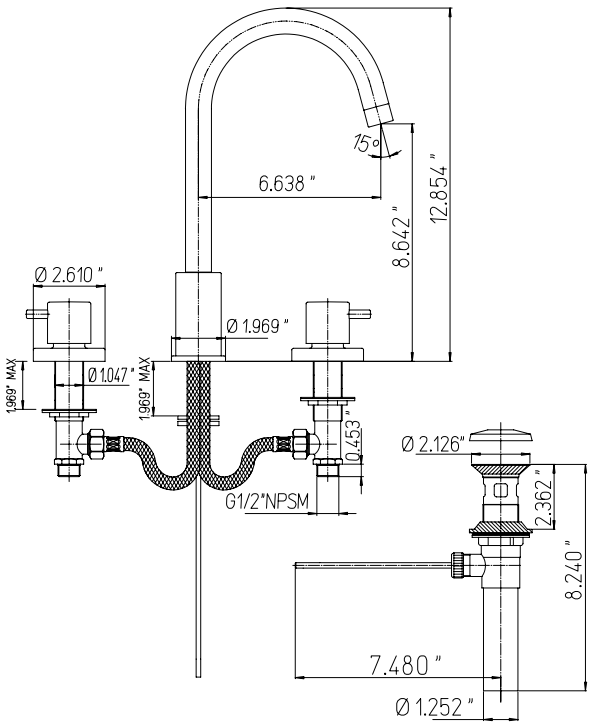
DIMENSIONS